Electric Straddle Stacker Capacity 1400 & 1600 kg L14/16 AS – AS AP & AS SP

SERIES 131

Linde Material Handling

Safety

Design of the Linde L 14/L 16 AS Electric Straddle Stacker is not only good to look at, but also good for protection of the operator. The low skirt ensures that the wheels remain safely within the truck contours. Together with the rounded, smooth shape of the chassis and tiller head, this reduces all risk of injury or damage.

Performance

The trucks show their true strength in efficiency on the job. Powerful 3 kW AC motor, Linde OptiLift® control for authentic proportional lifting and lowering, load capacity up to 1.600 kg and efficient brakes add up to productivity in service at any duty level.

Comfort

Everything the Linde L 14/L 16 AS is meant to do it does easily. And does most of it faster. All controls can be operated with either hand without ever having to let go of the tiller. The handles are made of corrosion-resisting material that is pleasant to the touch.

Reliability

Rugged construction makes this a truck to rely on. The sturdy mast and the frame of high-grade pressed steel contribute to considerably longer truck lifetime as well as fast, easy and safe load handling.

Service

Speed and economy continue over into truck diagnosis and preventive maintenance. CAN bus connectivity enables all truck data to be read out on a laptop computer by the service technician. Swift access to all components and maintenance-free AC-technology play an additional part in keeping truck uptime up.

Technical data (According to VDI 2198)

Characteristics	1.1	Manufacturer			LINDE
	1.2	Model designation			**L 14 AS / L 16 AS**
	1.3	Power Unit			Battery (3 PzS)
	1.4	Operation: manual, pedestrian, stand-on, seated			Pedestrian
	1.5	Load capacity		Q (kg)	1400/1600
	1.6	Load centre		c (mm)	600
	1.8	Axle centre to fork face (fork raised/lowered)		x (mm)	643
	1.9	Wheelbase		y (mm)	1449 [5]
Weights	2.1	Service weight (with battery item 6,5)	(±10 %)	kg	1470 [3]
	2.2	Axle load with load, drive side/load side	(±10 %)	kg	900/2170 [3]
	2.3	Axle load without load, drive side/load side	(±10 %)	kg	960/510 [3]
Wheels	3.1	Tyre treads: Polyurethane, Rubber			Rubber/Polyurethane
	3.2	Tyre size, drive side		ø x l (mm)	ø 254 x 102
	3.3	Tyre size, load side		ø x l (mm)	ø 85 x 85
	3.4	Auxiliary wheels (dimensions)		ø x l (mm)	ø 100 x 40 (x2)
	3.5	Wheels number, drive side/load side (x = driven)			1x + 2/2
	3.6	Track width, drive side	(±5 mm)	mm	–
	3.7	Track width, load side	(±5 mm)	mm	1030/1330/1480
Dimensions	4.2	Mast height, lowered		h1 (mm)	1990 [1)2)]
	4.3	Free lift		h2 (mm)	150 [1)2)]
	4.4	Lift height		h3 (mm)	2924/2844 [1)2)]
	4.5	Mast height, extended		h4 (mm)	3460/3380 [1)2)]
	4.8	Height of the platform (driving position)		h7 (mm)	–
	4.9	Height of the organ control, min/max		h14 (mm)	1103/1287
	4.15	Fork height, lowered		h13 (mm)	46
	4.19	Overall length		l1 (mm)	2153 [5]
	4.20	Length to fork face		l2 (mm)	773 [5]
	4.21	Overall width		b1/b2 (mm)	790/1160 – 1460 – 1610
	4.22	Fork dimensions		s/e/l (mm)	40/80/1150
	4.23	Fork carriage, DIN 1573 class A or B			ISO 2 B
	4.24	Fork carriage width		b3 (mm)	800
	4.25	Fork spread, min/max		b5 (mm)	–
	4.26	Straddle legs spread (from inside), min/max		b4 (mm)	900/1200/1350
	4.31	Ground clearance, under the mast		m1 (mm)	–
	4.32	Ground clearance, centre of the wheelbase, min/max		m2 (mm)	25
	4.33	Aisle width with pallet 1000 x 1200 across forks		Ast (mm)	2669 [4)5)]
	4.34	Aisle width with pallet 800 x 1200 along forks		Ast (mm)	2555 [5]
	4.35	Turning radius (fork raised)		Wa (mm)	1669
Performance	5.1	Travel speed, with/without load	(±5 %)	km/h	6/6
	5.2	Lifting speed, with/without load		m/s	0.11/0.21
	5.3	Lowering speed, with/without load		m/s	0.40/0.45
	5.7	Climbing ability, with/without load		%	–
	5.8	Maximum climbing ability, with/without load		%	9/10
	5.10	Service brake			Electromagnetic
Drive	6.1	Drive motor (60 minutes rating)		kW	1.5
	6.2	Lift motor rating 15 %		kW	3
	6.3	Battery according to DIN 43531/35/36 A, B, C, no			DIN 43535 B
	6.4	Battery voltage/rated capacity (5 h)		V/Ah	24/240
	6.5	Battery weight	(±10 %)	kg	200
	6.6	Power consumption in accordance with the standardised VDI cycle		Ah	–
Others	8.1	Type of drive control			LAC-Controller
	8.4	Sound level at operator's ear		dB (A)	< 70
		Vibrations on the platform (EN 13059)		m/s^2	–

1) Mast 2844 S for L 16 AS/Other mast: cf. table
2) Mast 2924 S for L 14 AS/Other mast: cf. table
3) Value for L 16 AS
4) With overall width b2 = 1610 mm
5) With a 3 PzS vertical battery change (+50 mm for the 4 PzS vertical and +75 mm for the 5 PzS vertical batterie change)

LINDE	LINDE
L 14 AS / L 16 AS–SP	**L 14 AS / L 16 AS–AP**
Battery (3 PzS)	Battery (3 PzS)
Stand-on	Stand-on
1400/1600	1400/1600
600	600
643	643
1449 [5)]	1449 [5)]
1525 [3)]	1495 [3)]
980/2195 [3)]	950/2195 [3)]
1040/485 [3)]	1010/485 [3)]
Rubber/Polyurethane	Rubber/Polyurethane
Ø 254 x 102	Ø 254 x 102
Ø 85 x 85	Ø 85 x 85
Ø 100 x 40 (x2)	Ø 100 x 40 (x2)
1x + 2/2	1x + 2/2
–	–
1030/1330/1480	1030/1330/1480
1990 [1)2)]	1990 [1)2)]
150 [1)2)]	150 [1)2)]
2924/2844 [1)2)]	2924/2844 [1)2)]
3460/3380 [1)2)]	3460/3380 [1)2)]
160	160
1160	1103/1287
46	46
2618 [5)]	2560 [5)]
1238 [5)]	1180 [5)]
790/1160 – 1460 – 1610	790/1160 – 1460 – 1610
40/80/1150	40/80/1150
ISO 2 B	ISO 2 B
1000	1100
–	–
900/1200/1350	900/1200/1350
–	–
25	25
3174 [4)5)]	3054 [4)5)]
3060 [5)]	2940 [5)]
2174	2054
10/10	10/10
–	–
0.40/0.45	0.40/0.45
–	–
9/10	9/10
Electromagnetic	Electromagnetic
3	3
3	3
DIN 43535 B	DIN 43535 B
24/240	24/240
200	200
–	–
LAC-Controller	LAC-Controller
< 70	< 70
1.1	1.1

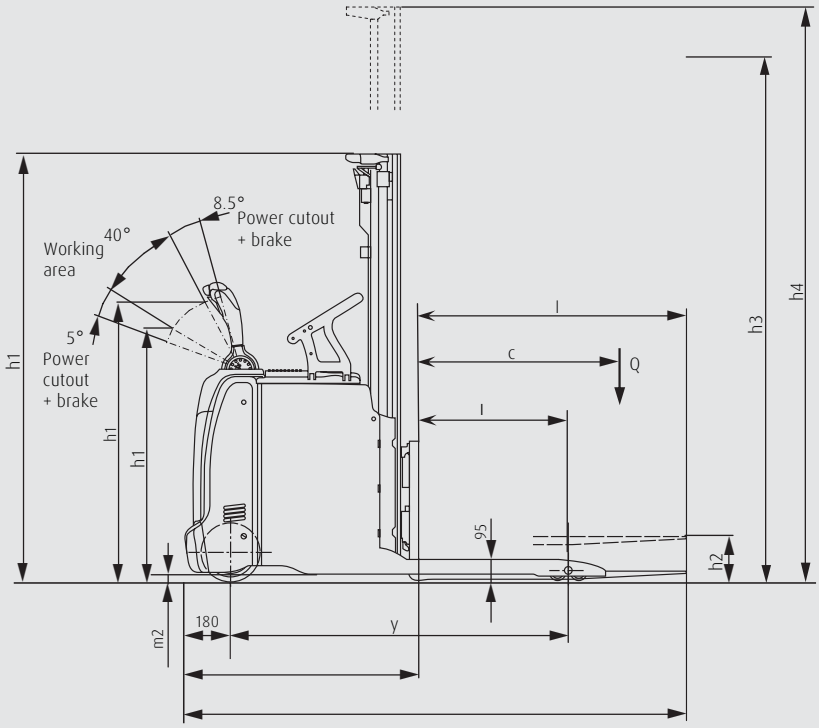

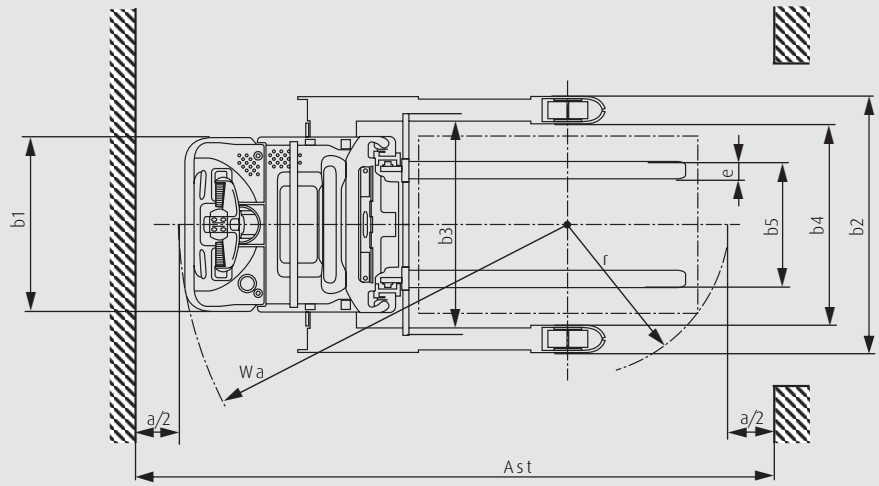

$$Ast = Wa + \sqrt{(l6 - x)^2 + \left(\frac{b_{12}}{2}\right)^2} + a$$

AST = Wa + r + a

Safety clearance a = 200 mm

Mast type L 14 AS (in mm)		**1924 S**	**2424 S**	**2924 S**	**3324 S**	**3824 S**	**4224 S**	**4724 S**	**1924 D**	**2424 D**	**2924 D**	**3324 D**	**3824 D**	**–**	**–**	**–**
Lift	**h3**	1924	2424	2924	3324	3824	4224	4724	1924	2424	2924	3324	3824	–	–	–
Lift + fork height	**h3+h13**	1970	2470	2970	3370	3870	4270	4770	1970	2470	2970	3370	3870	–	–	–
Height mast, lowered	**h1**	1490	1740	1990	2190	2440	2640	2890	1415	1665	1915	2115	2365	–	–	–
Height mast, extended	**h4**	2503	3003	3503	3903	4403	4803	5303	2503	3003	3503	3903	4403	–	–	–
Free lift	**h2**	150	150	150	150	150	150	150	879	1379	1462	1662	1912	–	–	–

Mast type L 16 AS (in mm)		**1844 S**	**2344 S**	**2844 S**	**3244 S**	**3744 S**	**4144 S**	**4644 S**	**1844 D**	**2344 D**	**2844 D**	**3244 D**	**3744 D**	**4266 T**	**4716 T**	**5316 T**
Lift	**h3**	1844	2344	2844	3244	3744	4144	4644	1844	2344	2844	3244	3744	4266	4716	5316
Lift + fork height	**h3+h13**	1890	2390	2890	3290	3790	4190	4690	1890	2390	2890	3290	3790	4312	4762	5362
Height mast, lowered	**h1**	1490	1740	1990	2190	2440	2640	2890	1415	1665	1915	2115	2365	1915	2065	2265
Height mast, extended	**h4**	2423	2923	3423	3823	4323	4723	5223	2423	2923	3423	3823	4323	4845	5295	5895
Free lift	**h2**	150	150	150	150	150	150	150	879	1129	1379	1579	1829	1379	1529	1729

Equipment

Standard equipment

Multifunction back lighted display
Key switch or Log in Pin code: ignition
Dedicated work station (with storage compartments)
Adjustable straddle legs (3 positions: 900, 1,200, 1,350 mm)
Power assisted steering with a proportional steering resistance
Positive steering (drive wheel) feedback
Automatic speed reduction when cornering
Linde OptiLift® control on the tiller
AC motor
Automatic braking
Electromagnetic emergency brake acting proportionally to the load weight
Cushion drive wheels
Mast protections (polycarbonate or mesh)
Vertical battery change
Ideal 45° driving position (SP)
Safe operator compartment with padded rests and cushioned full-suspension platform (SP)
One-hand Linde e-Driver® control (SP)
Self-centring steering (SP)
Folding stand-on platform with side guards (AP)
Protection –10°C

Optional equipment

Drive wheels: cushion non-marking or wet grip
Other mast types and lift heights
Soft landing of forks
Overhead guard
Ultra fast lifting
Support for data terminal or barcode reader (Pack N°2)
Cold store protection –35°C

Other options available on request

Features

Platform versions

SP concept

- → Operator protected by surrounding shields
- → Ideal driving position with panoramic visibility, secure and stable stand
- → Linde e-Driver®: Electric power steering, ergonomic design matched to 45° operator stance

AP versions

- → Folding cushioned rider platform
- → Integral side guards, fold up and down at one easy motion
- → Electric power steering, effortless to operate

Pedestrian version

- → Robust construction, rounded contours with no sharp edges
- → Operator safety ensured by low skirt and design of tiller head
- → All controls on tiller can be operated with either hand
- → Electric power steering, effortless and exact

Brakes

- → Automatic braking on release of drive control
- → Responsive electric countercurrent braking
- → Emergency stop button acts electro-magnetically on drive motor and proportional to the load

Versatile options

- → Choice of three straddle legs widths: 900, 1,200, 1,350 mm
- → Wide range of panorama-view masts, standard to triplex

CAN bus connectivity

- → Electronic management of all components for quick and easy diagnosis
- → All performance parameters can be set by service technician for precise matching to the specific application

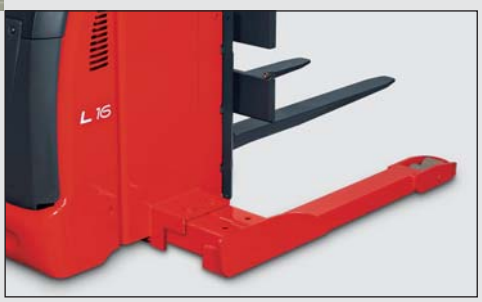

Workstation

- → Digital multifunction display with safety alert to component failure and servicing due, battery discharge indicator, hour meter, etc.
- → Truck access control by unique PIN code (no-cost option)
- → Wide and deep storage space for wrapping paper, work gloves, writing utensils, etc.

AC motor

- → Powerful, smooth-running motor, 3 kW maximum output
- → Top speed 6 km/h, loaded or unloaded (pedestrian version)
- → Top speed 10 km/h with or without a load (platform version)
- → Moisture- and dust-proof motor needs no maintenance

Batteries and chargers

- → Vertical battery change as standard
- → Wide range of batteries, 375 Ah (3 PzS) to 620 Ah (5 PzS)
- → Wide range of chargers, standard and wall-mount type

Subject to change in the interests of progress.
Illustrations and technical details non-binding. All dimensions subject to customary tolerance.

Linde AG
Linde Material Handling Division, Postfach 10 01 36, 63701 Aschaffenburg, Germany
Phone +49.60 21.99-0, Fax +49.60 21.99-15 70, www.linde-forklifts.com, info@linde-forklifts.com

Linde Material Handling

Printed in Germany · 092 · e · 3 · 0206 · Ind. B · Co